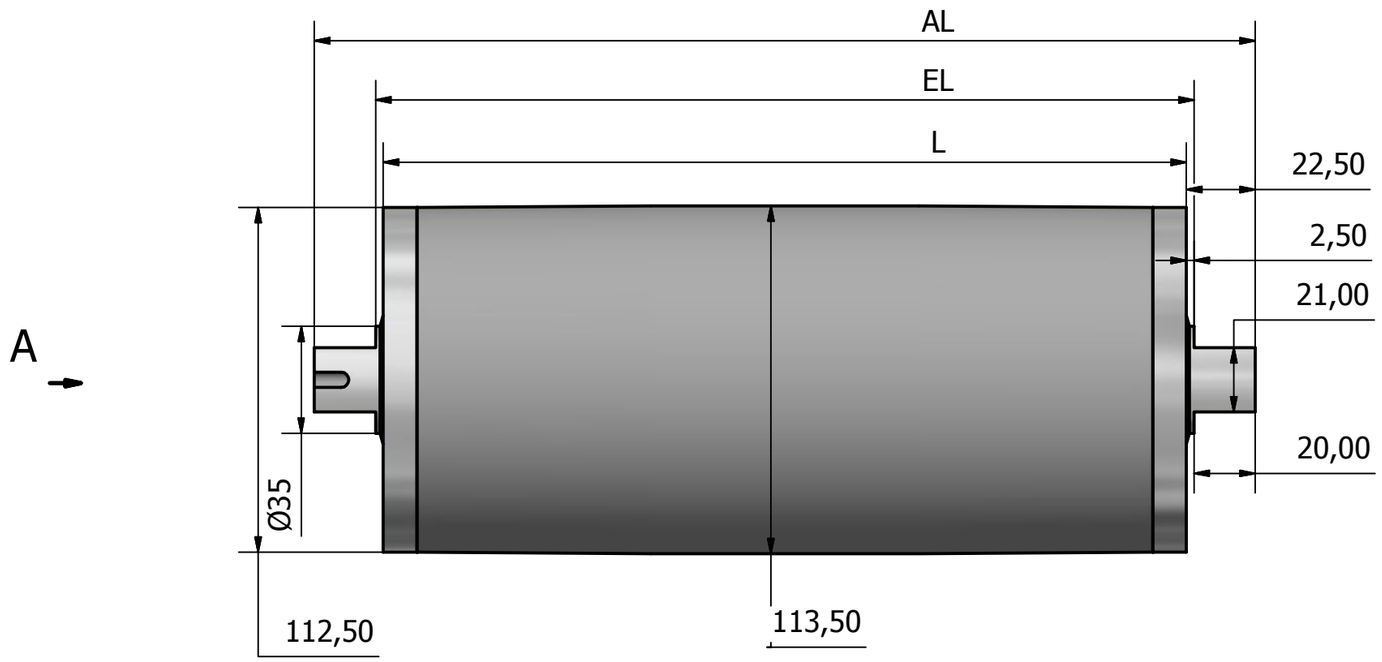

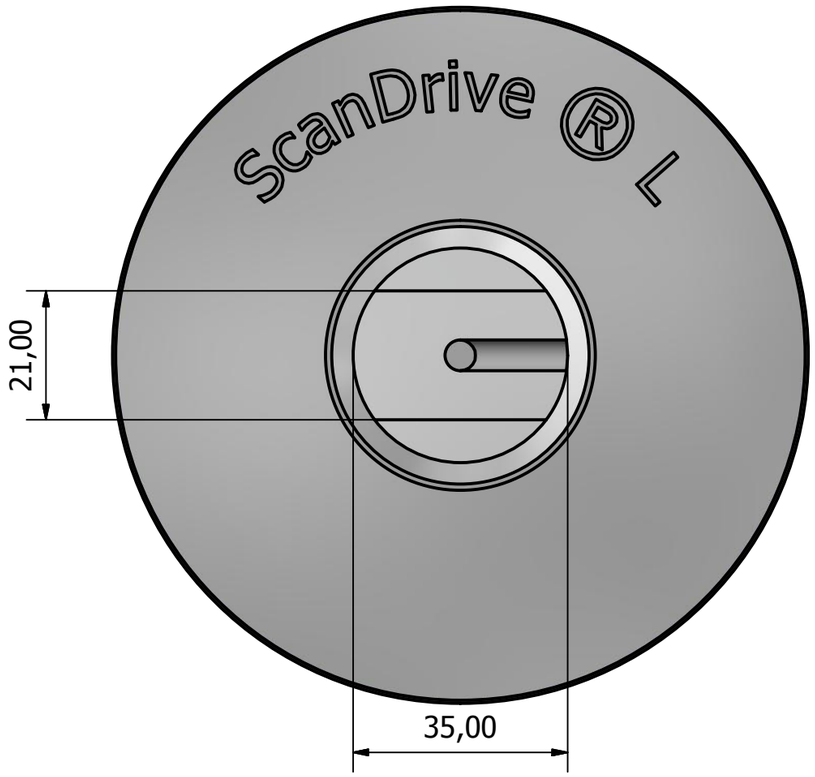

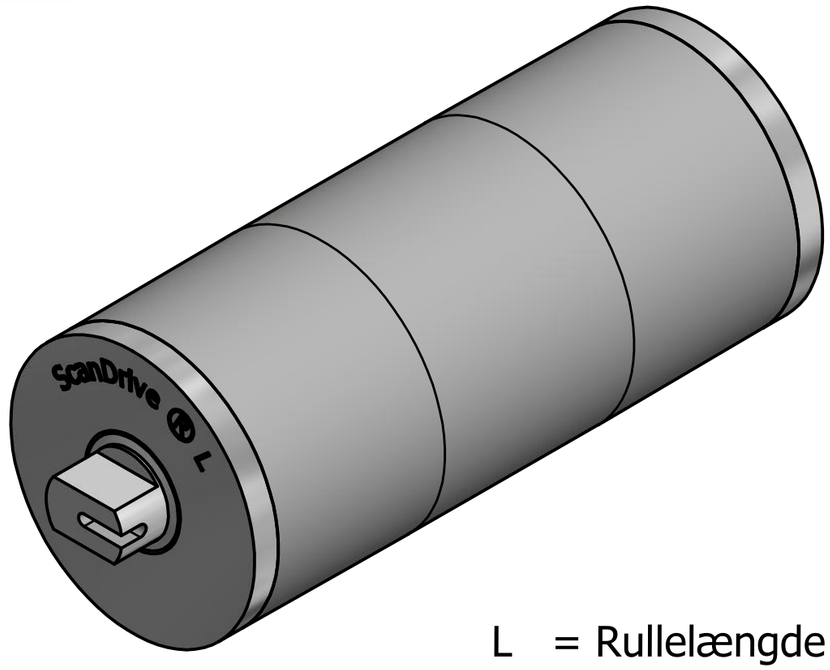

L = Rullelængde
EL = L + 5 mm
AL = L + 45 mm

Designed by	Checked by	Approved by	Date	Date	Design state:	
Gunnar Hansen				16-11-2015		
Tolerance : acc. to DS/ISO 2768 - medium						Sheet size: A3
ELLEGAARD.				Description:		Scale:
				Part number: Scandrive L Ø113 Standart IP66		Sheet 1 / 1